卷册检索号 SEARCH NO. OF THE VOLUME
MLHVDC-LCS-CET-DD-SG-0102 49-B60011S-S0102

第 1 页 共 1 页
PAGE OF

图纸文件目录（首页）

CATALOG OF DRAWING DOCUMENTS (HEAD PAGE)

拉合尔±660kV换流站 工程 施工图 阶段
±660kV Lahore Converter Station PROJECT Detail Design DESIGN STAGE

水工 专业 第 01 卷 第 02 册
Hydraulic SPECIALITY VOLUME BOOK

卷册名称 交流滤波器场区室外排水布置图
Volume name AC filter field outdoor drainage layout

批 准 APPROVED BY	田良璞
审 核 REVIEWED BY	王玉霞
设计/勘测 DESIGNED BY/ SURVEYED BY	[illegible]
图 纸 1 张 DRAWING NOS.	打印件 / 本 PRINTED COPIES NOS.

序号 No.	图 号 DRAWING NO.	文 件 名 称 DOCUMENT TITLE	版本 EDITION	张 NOS.	本 NOS.	备注 REMARKS
1	49-B60011S-S0102-001	交流滤波器场室外雨水排水管道平面布置图	B	1		
		AC filter field outdoor rainwater drainage pipe floor plan				
2	49-B60011S-S0102-002	室外雨水排水管道系统图	B	1		
		Outdoor Rainwater Drainage System Drawing				
3	49-B60011S-S0102-003	室外雨水下水管道汇总表	B	1		
		Outdoor rainwater pipe summary table				
4	49-B60011S-S0102-004	室外雨水下水管道材料表	B	1		
		Outdoor rainwater pipe material table				

注:

华东院设计
Design of ECEPDI

装备院设计
Design of CET

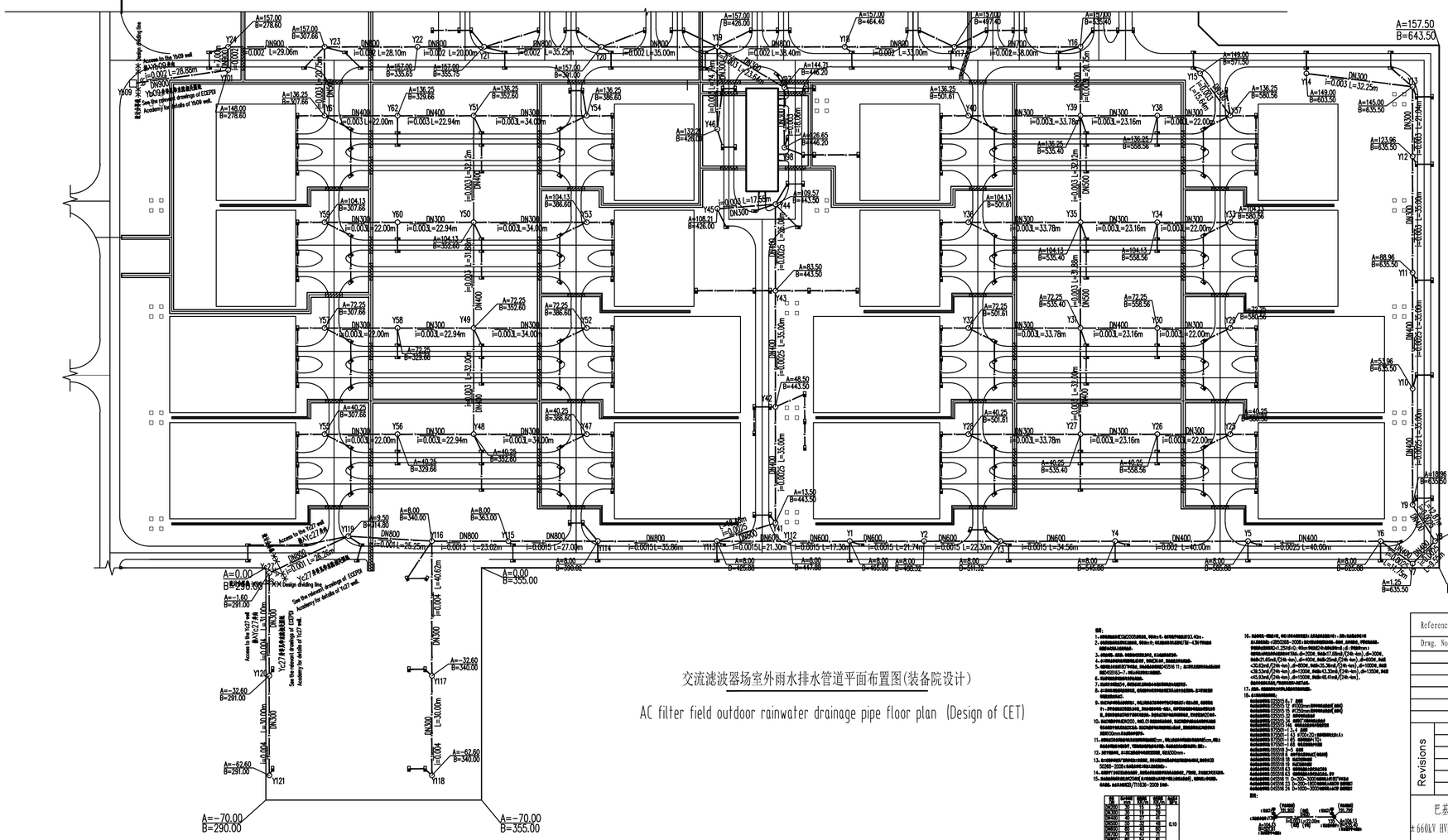

交流滤波器场室外雨水排水管道平面布置图(装备院设计)

AC filter field outdoor rainwater drainage pipe floor plan (Design of CET)

Notes:

1.The elevation of this chart is based on the EGM2008 elevation system, in m. The average elevation of the station area is 193.40m.

2.The station coordinate(A0) is adopted in this volume,unit of coordinate is m.station coordinate(A0) and UTM-43N system conversion formula refers to Civil Engineering volume.

3.Relative location of roads,buildings and structures in the drawing is only for schematic drawing,details refer to Civil Engineering volume.

4.Material of rain water piping is PE pipe(Class E), diameters is expressed as symbol D. Pipe elevation is represented with the inner bottom elevation.

5.RC pipe uses 180° and A grout foundation,refers to «Water Supply & Discharge Standard Collective Drawing»(03S214 11) Construction requirements and descriptions refer to «Water Supply & Discharge Standard Collective Drawing»(03S214)-7.Requirements of all backfill shall comply with construction standards.

7.Design return period of rainwater system is 3 years, rainstorm intensity shall be calculated in rainstorm intensity formula of Lahore.

8.Station road adopts asphalt road type,detailed design on road and vertical layout refers to civil engineering volume.The slope of the site should slope towards to gutter inlet.

9.Gutter inlet should be built referring to water supply and drainage standard drawings, flat-grate gutter inlet shall be installed on site.Concrete well ring,modular cast iron grates. All the gutter inlets are only demonstrative,which should be done with roads and site and can be adjusted with road and vertical planning,and make sure that gutter inlets should be at the lowest position of local area.All of grates of gutter inlet shall adopt modular cast iron, design load is vehicle-class 20.

10.The diameter of the connection pipe of the gully is DN200, and the rainwater inspection wells are all sloped at a slope of 0.01.

The elevation & diameter of connecting point between branch and inspection well refer to summary table in this volume,branches shall adopt RC drainage pipe the sand protection layer with a thickness of 100mm shall be layed around branches that passing through roadbed.

11.Top elevation of gutter inlet cover is 20 mm lower than ground elevation,inspection well that lies on site is 50mm higher than ground level,inspection well that lies on road has a same top elevation with road,which can be adjusted with elevation of ground,inspection well shall add anti-falling nets.

12.In order to clear silt,mud dish shall be set in converging inspection well,with a depth of 300mm.

13.Please refer to construction and installation descriptions of relevant manufacturers,comply with relevant standards & rules of national municipal drainage pipeline and «Code for construction and acceptance of water and sewerage pipeline works»(GB50268-2008).

14.Inspection well No. is expressed as 1,all drain slope direction is determined according to the start & end point elevation,reverse slope is strictly prohibited,other dimension style refer to graphic symbol.

15.Road ground level level is designed according to vehicle-class 20(guarantee to prevent the crushing of inspection well on roads during construction),RC pipe specification,external pressure level,the internal pressure shall meet requirements of GB/T11836-2009 class II.

Diameter DN	Wall thickness		Pipe length	
DN	e min	SDR/PN	L(m)	
DN300	30	11	2.5	0.10
DN400	40	11	2.5	
DN500	50	11	2.5	
DN600	60	11	2.5	
DN800	80	11	2.5	
DN900	90	11	2.5	
DN1000	100	11	2.5	
DN1200	120	11	2.5	
DN1400	140	11	2.5	
DN1600	160	11	2.5	
DN1800	180	11	2.5	
DN2000	200	11	2.5	

16.Rubbish pipe construction is a concealed work,each process must be qualified respectably construction in rainy season.Hydrostatic test for RC drainage pipe shall be completed during construction process according to «Code for construction and acceptance of water and sewerage pipeline works»(GB50268-2008).
Leakage is not allowed during visual inspection.Water seepage of RC pipe shall meet Q≤1.25Ld ,allowable water seepage shall conform to the following relations:
<1>.Water seepage capacity(qw)[qw] per km in 24h,of inner diameter,mm:allowable water seepage for RC pipe shall conform to the following relations :
d=300,water seepage=77.8m3/(24h·km);d=350,water seepage=21.65m3/(24h·km);
d=400,water seepage=25m3/(24h·km);d=500,water seepage
=30.25m3/(24h·km);d=600,water seepage=35.36m3/(24h·km);d=1000,
=39.53m3/(24h·km);d=1200,water seepage=43.30m3/(24h·km);d=1350,water seepage
=45.93m3/(24h·km);d=1500,water seepage=48.41m3/(24h·km);.
Covers should be carefully covered up,in order to prevent drains blocking,dumping building rubbish to inspection well is strictly prohibited.

17.The AC field and AC filter field are designed by China Electric Power Equipment Design Institute.

18.Standard schematic handbook used in this project:
Water Supply & Discharge Standard Collective Drawing 02S205 6-7 General Description
02S203 T2 Φ1000mm Round brick sewage inspection well(Cover plate)
02S203 15 Φ1250mm Round brick sewage inspection well(Cover plate)
02S203 16 Φ1500mm Round brick sewage
02S203 14 Rectangular 900mm joint brick inspection well
06S202 14L Brick diameter well dropping location
97S201—1,4 General Description
97S201—1,63 KW20.21Heavy ductile iron support(s.t)
97S201—1,68 Ductile iron support(T2)
97S201—1,69 Ductile iron support(T3)
06S306 3-5 General Description drawing of cast iron and plastic steel
06S306 6 Brick single grate gutter grating inlet(cast iron well ring)
06S306 18 Lintel reinforcement drawing of gutter inlet
06S306 19 reinforcement drawing of gutter inlet cover
06S306 63 Ductile iron triangular well top grate gutter inlet cover
06S306 64 Ductile iron triangular well top grate gutter inlet cover,grating
06S306 11 D=200-300(DN) RC pipe well wall and plane reinforcement
04S206 21 D=200-1000 RC pipe with tail & socket connection,Rubber ring joint
04S206 24 D=1000-3000 RC reinforced pipe with Rubber ring joint

Legend:

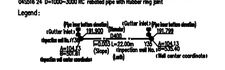
(Pipe length before deviation)
«Gutter Inlet»
(Gutter inlet)
(Pipe length before deviation)
Number
Length
Gutter inlet No.
Gutter inlet elevation
Gutter inlet No.
Gutter inlet elevation
Gutter inlet No.
Gutter inlet elevation

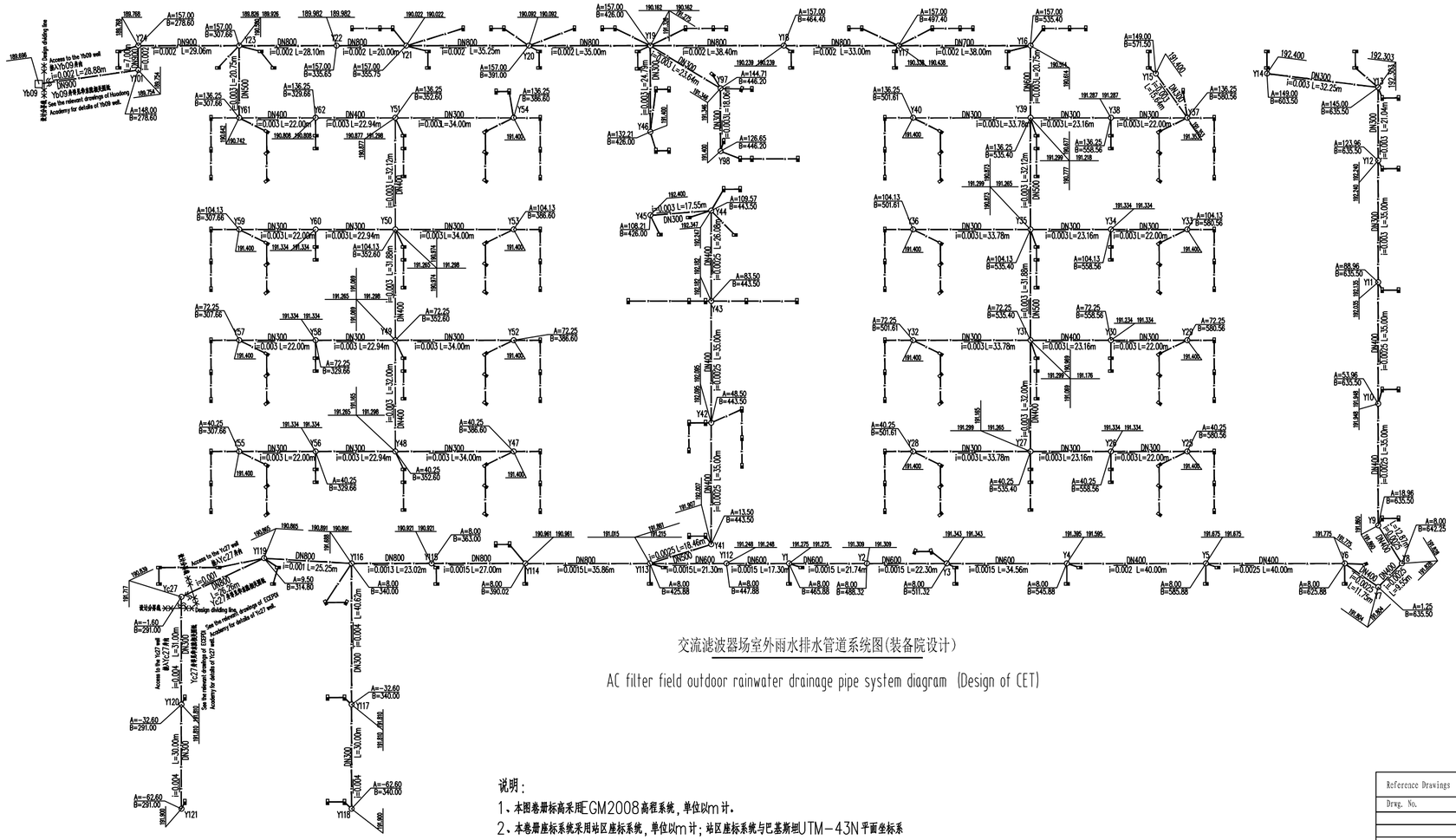

交流滤波器场室外雨水排水管道系统图(装备院设计)

AC filter field outdoor rainwater drainage pipe system diagram (Design of CET)

说明:

1、本图卷册标高采用EGM2008高程系统，单位以m计。

2、本卷册座标系统采用站区座标系统，单位以m计；站区座标系统与巴基斯坦UTM-43N平面坐标系的换算公式详见土建相关卷册。

3、本图内道路、建筑物、构筑物相对位置仅为示意，以土建相关卷册为准。

4、132区域暂不施工，根据总图专业调整后同步进行。

5、其他说明详见本卷册B60011S-S0201-001图。

Notes:

1、EGM2008 elevation is adopted in this volume,unit of elevation is m.

2、The station coordinate(AB) is adopted in this volume,unit of coordinate is m ; station coordinate(AB) and UTM-43N system conversion formula refers to Civil Engineering volume.

3、Relative location of roads, buildings and structures in the drawing is only for schematic drawing,details refer to Civil Engineering volume.

4、The 132 area will not be constructed temporarily, and will be synchronized according to the general adjustment of the general plan.

5、Other descriptions refer to drawing B60011S-S0201-001.

Reference Drawings

Drwg. No.	Title

Revisions

	Name	Date	Notes

巴基斯坦默蒂亚里—拉合尔±660kV直流输电工程

±660kV HVDC Project from Matiari to Lahore in Pakistan

NATIONAL TRANSMISSION & DESPATCH COMPANY (NTDC) LIMITED PAKISTAN

CONTRACTOR 国家电网 中国电力技术装备有限公司 CHINA ELECTRIC POWER EQUIPMENT AND TECHNOLOGY CO.,LTD.

拉合尔±660kV换流站

±660kV Lahore Converter Station

设计阶段 PHASE: 施工图 Detail Design

M L H V D C - L C S - C E T - D D - S G - 0 1 0 1 - 0 0 1 B

	姓名 Name	日期 Date
设计 Designed		2019.05.10
校核 Checked		2019.05.10
审核 Reviewed		2019.05.10
批准 Approved		2019.05.10

室外雨水排水管道系统图

Outdoor Rainwater Drainage System Drawing

专业 Speciality	会签 Sign	日期 Date
总图		2019.05.10
电一		2019.05.10

比例 Scale: 1:700

图号 DWG NO.: 49-B60011S-S0102-002

所本 REV.: B

594X841

检查井编号 No.	检查井结点 Inspection Well Nodes 平面示意图 Plan Sketch	检查井中心座标 Center Coordinate Of Inspection Well A/B m	干管 Main Pipe D1 管径 Diameter mm	D1 标高 Elevation m	D2 管径 Diameter mm	D2 标高 Elevation m	支管 Branch Pipe ø1 ø3 ø5 管径 Diameter mm	标高 Elevation m	ø2 ø4 ø6 管径 Diameter mm	标高 Elevation m	检查井直径 Inner Diameter Of Inspection Well mm	检查井标高 Elevation Of Inspection Well m 井顶 Top	井底 Bottom	检查井深 Depth Of Inspection Well m	参考图号及备注 Reference Drawing No. & Remarks
Y1	D2 D1 ø1 ø2	8.00/465.88	600	191.275	600	191.275	200 200	192.35 192.35	200 200	192.35 192.35	1000	193.450	191.275	2.175	Water supply and drainage standard collective drawings 给水排水标准图集 02S515 12
Y2	D2 D1	8.00/488.32	600	191.309	600	191.309					1000	193.450	191.309	2.141	Water supply and drainage standard collective drawings 给水排水标准图集 02S515 12
Y3	ø1 D1 D2 ø2	8.00/511.32	600	191.343	600	191.343	200 200	192.35 192.35	200 200	192.35 192.35	1000	193.450	191.343	2.107	Water supply and drainage standard collective drawings 给水排水标准图集 02S515 12
Y4	D2 D1 ø1 ø2	8.00/545.88	400	191.595	600	191.395	200 200	192.35 192.35	200 200	192.35 192.35	1000	193.450	191.595	1.775	Water supply and drainage standard collective drawings 给水排水标准图集 02S515 12
Y5	D2 D1 ø1 ø2	8.00/585.88	400	191.675	400	191.675	200 200	192.35 192.35	200 200	192.35 192.35	1000	193.450	191.675	1.675	Water supply and drainage standard collective drawings 给水排水标准图集 02S515 12
Y6	D2 ø1 ø2 D1	8.00/625.88	400	191.775	400	191.775	200 200	192.35 192.35	200 200	192.35 192.35	1000	193.450	191.775	1.675	Water supply and drainage standard collective drawings 给水排水标准图集 02S515 12
Y7	D2 D1	1.25/635.50	400	191.804	400	191.804					1000	193.450	191.804	1.646	Water supply and drainage standard collective drawings 给水排水标准图集 02S515 12
Y8	D1 D2	8.00/642.25	400	191.828	400	191.828					1000	193.450	191.828	1.622	Water supply and drainage standard collective drawings 给水排水标准图集 02S515 12
Y9	D1 ø1 D2	18.96/635.50	400	191.860	400	191.860	200 200	192.35 192.35			1000	193.450	191.860	1.590	Water supply and drainage standard collective drawings 给水排水标准图集 02S515 12
Y10	D1 ø1 D2	53.96/635.50	400	191.948	400	191.948	200 200	192.35 192.35			1000	193.450	191.948	1.502	Water supply and drainage standard collective drawings 给水排水标准图集 02S515 12
Y11	D1 D2 ø1	88.96/635.50	300	192.135	400	192.035	200 200	192.35 192.35			1000	193.450	192.035	1.415	Water supply and drainage standard collective drawings 给水排水标准图集 02S515 12
Y12	D1 D2 ø1	123.96/635.50	300	192.240	300	192.240	200 200	192.35 192.35			1000	193.450	192.240	1.210	Water supply and drainage standard collective drawings 给水排水标准图集 02S515 12
Y13	ø1 D1 ø2 D2	157.00/635.50	300	191.886	300	191.886	200 200	192.25 192.35	200 200	192.35 192.35	1000	193.450	191.886	1.564	Water supply and drainage standard collective drawings 给水排水标准图集 02S515 12
Y14	ø1 D1	149.00/603.50	300	192.400			200 200	192.35 192.35			1000	193.450	192.400	1.05	Water supply and drainage standard collective drawings 给水排水标准图集 02S515 12
Y15	ø1 D1	149.00/571.50	300	191.400			200 200	192.35 192.35			1000	193.450	191.400	2.05	Water supply and drainage standard collective drawings 给水排水标准图集 02S515 12
Y16	D2 ø1 ø2 D1	157.00/535.40	600	190.614	700	190.514	200 200	192.34 192.34	200 200	192.25 192.25	1250	193.450	190.514	2.936	Water supply and drainage standard collective drawings 给水排水标准图集 02S515 12
Y17	ø1 D2 ø2 ø1 D1	157.00/497.40	700	190.438	800	190.338	200 200	192.35 192.30	200 200	192.22 192.22	1250	193.450	190.338	3.112	Water supply and drainage standard collective drawings 给水排水标准图集 02S515 12
Y18	D2 ø1 D1 ø2	157.00/464.40	800	190.239	800	190.239	200 200	192.35 192.35			1250	193.450	190.239	3.211	Water supply and drainage standard collective drawings 给水排水标准图集 02S515 12
Y19	D2 ø1 ø2 ø1 D1	157.00/426.00	800	190.162	800	190.162	200 300 300	192.35 191.775 191.826	200 200	192.22 192.35	1250	193.450	190.162	3.288	Water supply and drainage standard collective drawings 给水排水标准图集 02S515 12
Y20	D2 ø1 ø2 ø1 D1	157.00/391.00	800	190.092	800	190.092	200 200	192.33 192.30	200 200	192.31 192.30	1250	193.450	190.092	3.358	Water supply and drainage standard collective drawings 给水排水标准图集 02S515 12
Y21	D2 ø1 ø2 D1 ø1	157.00/355.75	800	190.022	800	190.022	200 600	192.27 191.115	200 200	192.27 192.33	1250	193.450	190.022	3.428	Water supply and drainage standard collective drawings 给水排水标准图集 02S515 12
Y22	D2 D1	157.00/355.65	800	189.982	800	189.982					1250	193.450	189.982	3.468	Water supply and drainage standard collective drawings 给水排水标准图集 02S515 12
Y23	D2 D1 ø1 ø2	157.00/307.66	800	189.926	900	189.826	200 500	192.27 190.580	200 200	192.35 192.35	1250	193.450	189.826	3.624	Water supply and drainage standard collective drawings 给水排水标准图集 02S515 12
Y24	ø1 D1 D2	157.00/278.60	900	189.768	900	189.768	200 200	192.34 192.34			1250	193.450	189.768	3.682	Water supply and drainage standard collective drawings 给水排水标准图集 02S515 12
Y25	D1 ø1 ø2	40.25/580.56	300	191.400			200 200	192.22 192.22	200 200	192.20 192.20	1000	193.450	191.400	2.05	Water supply and drainage standard collective drawings 给水排水标准图集 02S515 12
Y26	D2 D1 ø1	40.25/558.56	300	191.334	300	191.334	200 200	192.35 192.35			1000	193.450	191.334	2.116	Water supply and drainage standard collective drawings 给水排水标准图集 02S515 12
Y27	D2 ø1 D1	40.25/535.40	300	191.265	400	191.165	200 200	192.28 192.28	300 300	191.299 191.299	1000	193.450	191.165	2.285	Water supply and drainage standard collective drawings 给水排水标准图集 02S515 12
Y28	ø2 D1 ø1	40.25/501.61	300	191.400			200 200	192.22 192.22	200 200	192.20 192.20	1000	193.450	191.400	2.05	Water supply and drainage standard collective drawings 给水排水标准图集 02S515 12
Y29	D1 ø1 ø2	72.25/580.56	300	191.400			200 200	192.22 192.22	200 200	192.20 192.20	1000	193.450	191.400	2.05	Water supply and drainage standard collective drawings 给水排水标准图集 02S515 12
Y30	D2 D1 ø1	72.25/558.56	300	191.334	400	191.234	200 200	192.35 192.35			1000	193.450	191.234	2.216	Water supply and drainage standard collective drawings 给水排水标准图集 02S515 12
Y31	D2 ø1 D1 ø1 ø2	72.25/535.40	400	191.176	500	190.969	300 200	191.069 192.27	300 200	191.299 192.27	1000	193.450	190.969	2.481	Water supply and drainage standard collective drawings 给水排水标准图集 02S515 12
Y32	ø2 D1 ø1	72.25/501.61	300	191.400			200 200	192.22 192.20	200 200	192.20 192.20	1000	193.450	191.400	2.05	Water supply and drainage standard collective drawings 给水排水标准图集 02S515 12
Y33	D1 ø1 ø2	104.13/580.56	300	191.400			200 200	192.22 192.20	200 200	192.20 192.20	1000	193.450	191.400	2.05	Water supply and drainage standard collective drawings 给水排水标准图集 02S515 12
Y34	D2 D1 ø1	104.13/558.56	300	191.334	300	191.334	200 200	192.35 192.35			1000	193.450	191.334	2.116	Water supply and drainage standard collective drawings 给水排水标准图集 02S515 12
Y35	D2 D1 ø1 ø2 ø1	104.13/535.40	300	191.265	500	190.873	500 200	190.873 192.27	300 200	191.299 192.27	1000	193.450	190.873	2.577	Water supply and drainage standard collective drawings 给水排水标准图集 02S515 12
Y36	ø2 D1 ø1	104.13/501.61	300	191.400			200 200	192.22 192.22	200 200	192.20 192.20	1000	193.450	191.400	2.05	Water supply and drainage standard collective drawings 给水排水标准图集 02S515 12
Y37	D1 ø1 ø2 D2 ø1	136.25/580.56	300	191.353	300	191.353	200 200	192.22 192.29	200 200	192.20 192.20	1000	193.450	191.353	2.097	Water supply and drainage standard collective drawings 给水排水标准图集 02S515 12
Y38	D2 D1 ø1	136.25/558.56	300	191.287	300	191.287	200 200	192.35 192.35			1000	193.450	191.287	2.163	Water supply and drainage standard collective drawings 给水排水标准图集 02S515 12
Y39	D2 ø1 D1 ø1 ø2	136.25/535.40	300	191.218	600	190.677	500 200	190.777 192.27	300 200	191.299 192.27	1000	193.450	190.677	2.773	Water supply and drainage standard collective drawings 给水排水标准图集 02S515 12
Y40	ø2 D1 ø1	136.25/501.61	300	191.400			200 200	192.22 192.20	200 200	192.20 192.20	1000	193.450	191.400	2.05	Water supply and drainage standard collective drawings 给水排水标准图集 02S515 12
Y41	ø1 D1 D2	13.50/443.50	400	192.007	500	191.907	200 200	192.35 192.35			1000	193.450	191.907	1.543	Water supply and drainage standard collective drawings 给水排水标准图集 02S515 12
Y42	ø1 D1 ø2 D2	48.50/443.50	400	192.095	400	192.095	200 200	192.35 192.35	200 200	192.20 192.20	1000	193.450	192.095	1.355	Water supply and drainage standard collective drawings 给水排水标准图集 02S515 15
Y43	D1 ø1 ø2 D2	83.50/443.50	400	192.182	400	192.182	200 200	192.35 192.35	200 200	192.35 192.35	1000	193.450	192.182	1.268	Water supply and drainage standard collective drawings 给水排水标准图集 02S515 15
Y44	D1 ø1 ø2 ø1 D2	109.57/443.50	300	192.347	400	192.247	200 200	192.35 192.35	200 200	192.33 192.33	1000	193.450	192.247	1.203	Water supply and drainage standard collective drawings 给水排水标准图集 02S515 15
Y45	D1 ø1	108.21/426.00	300	192.400			200 200	192.35 192.35			1000	193.450	192.400	1.05	Water supply and drainage standard collective drawings 给水排水标准图集 02S515 15
Y46	D1 ø1 ø2	132.21/426.00	300	191.400			200 200	192.28 192.28	200 200	192.28 192.28	1000	193.450	191.400	2.05	Water supply and drainage standard collective drawings 给水排水标准图集 02S515 15
Y47	D1 ø1 ø2	40.25/386.60	300	191.400			200 200	192.21 192.21	200 200	192.20 192.20	1000	193.450	191.400	2.05	Water supply and drainage standard collective drawings 给水排水标准图集 02S515 15
Y48	D2 ø1 ø2 D1	40.25/352.60	300	191.265	400	191.165	200 200	192.28 192.28	300 300	191.298 191.298	1000	193.450	191.165	2.285	Water supply and drainage standard collective drawings 给水排水标准图集 02S515 15
Y49	D2 ø1 ø2 D1 ø1	72.25/352.60	400	191.069	400	191.069	200 300	192.28 191.265	300 300	191.298 191.298	1000	193.450	191.069	2.381	Water supply and drainage standard collective drawings 给水排水标准图集 02S515 15
Y50	D2 ø1 ø2 D1 ø1	104.13/352.60	400	190.974	400	190.974	200 300	192.28 191.265	300 300	191.298 191.298	1000	193.450	190.974	2.476	Water supply and drainage standard collective drawings 给水排水标准图集 02S515 15
Y51	D2 ø1 ø2 D1 ø1	136.25/352.60	400	190.877	400	190.877	200 200	192.28 192.28	300 300	191.298 191.298	1000	193.450	190.877	2.573	Water supply and drainage standard collective drawings 给水排水标准图集 02S515 15
Y52	D1 ø1 ø2	72.25/386.60	300	192.400			200 200	192.21 192.21	200 200	192.20 192.20	1000	193.450	192.400	1.05	Water supply and drainage standard collective drawings 给水排水标准图集 02S515 15
Y53	D1 ø1 ø2	104.25/386.60	300	191.400			200 200	192.21 192.21	200 200	192.20 192.20	1000	193.450	191.400	2.05	Water supply and drainage standard collective drawings 给水排水标准图集 02S515 15
Y54	D1 ø1 ø2	136.25/386.60	300	191.400			200 200	192.21 192.33	200 200	192.20 192.20	1000	193.450	191.400	2.05	Water supply and drainage standard collective drawings 给水排水标准图集 02S515 15
Y55	ø2 D1 ø1	40.25/307.66	300	191.400			200 200	192.22 192.20	200 200	192.20 192.20	1000	193.450	191.400	2.05	Water supply and drainage standard collective drawings 给水排水标准图集 02S515 12
Y56	D1 D2 ø1	40.25/329.66	300	191.334	300	191.334	200 200	192.35 192.35			1000	193.450	191.334	2.116	Water supply and drainage standard collective drawings 给水排水标准图集 02S515 12
Y57	ø2 D1 ø1	72.25/307.66	300	191.400			200 200	192.22 192.20	200 200	192.20 192.20	1000	193.450	191.400	2.05	Water supply and drainage standard collective drawings 给水排水标准图集 02S515 12
Y58	D1 ø1 D2	72.25/329.66	300	191.334	300	191.334	200 200	192.35 192.35			1000	193.450	191.334	2.116	Water supply and drainage standard collective drawings 给水排水标准图集 02S515 12
Y59	ø2 D1 ø1	104.13/307.66	300	191.400			200 200	192.22 192.20	200 200	192.20 192.20	1000	193.450	191.400	2.05	Water supply and drainage standard collective drawings 给水排水标准图集 02S515 12
Y60	D1 ø1 D2	104.13/329.66	300	191.334	300	191.334	200 200	192.35 192.35			1000	193.450	191.334	2.116	Water supply and drainage standard collective drawings 给水排水标准图集 02S515 12
Y61	D2 ø1 D1 ø1	136.25/307.66	400	190.742	500	190.642	200 200	192.22 192.20	200 200	192.20 192.20	1000	193.450	190.642	2.808	Water supply and drainage standard collective drawings 给水排水标准图集 02S515 12
Y62	D2 D1 ø1	136.25/329.66	400	190.808	400	190.808	200 200	192.35 192.35			1000	193.450	190.808	2.642	Water supply and drainage standard collective drawings 给水排水标准图集 02S515 12
Y97	D2 ø1 ø2 D1	144.71/446.20	300	191.346	300	191.346	200 200	192.35 192.35	200 200	192.35 192.35	1000	193.450	191.346	2.104	Water supply and drainage standard collective drawings 给水排水标准图集 02S515 12
Y98	D1 ø2 ø1	126.65/446.20	300	191.400			200 200	192.22 192.22	200 200	192.35 192.35	1000	193.450	191.400	2.05	Water supply and drainage standard collective drawings 给水排水标准图集 02S515 12
Yb09	D1	146.00/250.00	900	189.696								193.450	189.696		Yb09 井利瓦华东殷相关图纸
Y101	D2 D1	148.00/278.60	900	189.754	900	189.754					1250	193.450	189.754	3.696	Water supply and drainage standard collective drawings 给水排水标准图集 02S515 12
Y112	D2 D1	8.00/447.88	600	191.248	600	191.248					1000	193.450	191.248	2.202	Water supply and drainage standard collective drawings 给水排水标准图集 02S515 12
Y113	D2 ø1 ø2 D1 ø1	8.00/425.88	600	191.215	800	191.015	200 500	192.35 191.861	200 200	192.35 192.35	1250	193.450	191.015	2.435	Water supply and drainage standard collective drawings 给水排水标准图集 02S515 12
Y114	ø1 D1 D2 ø2	8.00/390.02	800	190.961	800	190.961	200 200	192.34 192.34	200 200	192.35 192.35	1250	193.450	190.961	2.489	Water supply and drainage standard collective drawings 给水排水标准图集 02S515 12
Y115	D2 D1 ø1	8.00/363.00	800	190.921	800	190.921	200 200	192.35 192.35			1250	193.450	190.921	2.529	Water supply and drainage standard collective drawings 给水排水标准图集 02S515 12
Y116	D2 D1 ø1 ø2	8.00/340.00	800	190.891	800	190.891	300 300	191.688 191.688	200 200	192.21 192.21	1250	193.450	190.891	2.559	Water supply and drainage standard collective drawings 给水排水标准图集 02S515 12
Y117	ø1 D2 D1	-32.60/335.00	300	191.810	300	191.810	200 200	192.35 192.35			1000	193.450	**191.810**	1.64	Water supply and drainage standard collective drawings 给水排水标准图集 02S515 12
Y118	ø1 D1	-62.60/335.00	300	191.900			200 200	192.26 192.26			1000	193.450	191.900	1.55	Water supply and drainage standard collective drawings 给水排水标准图集 02S515 12
Y119	ø1 ø2 D2 D1	9.50/314.80	800	190.865	800	190.865	200 200	192.35 192.35	200 200	192.24 192.24	1250	193.450	190.865	2.585	Water supply and drainage standard collective drawings 给水排水标准图集 02S515 12
Y120	D2 ø1 D1	-32.60/291.00	300	191.810	300	191.810	200 200	192.35 192.35			1000	193.450	**191.810**	1.64	Water supply and drainage standard collective drawings 给水排水标准图集 02S515 12
Y121	D1 ø1	-62.60/291.00	300	191.900			200 200	192.26 192.26			1000	193.450	191.900	1.55	Water supply and drainage standard collective drawings 给水排水标准图集 02S515 12
Yc27	ø1 D2 D1 ø1	-1.60/291.00	300	191.717	800	190.839						193.450			Yc27 井利瓦华东殷相关图纸

Notes:

1. EGM2008 elevation is adopted in this volume, unit of elevation is m.Elevation of rain water pipe means bottom elevation.
2. The station coordinate(AB) is adopted in this volume,unit of coordinate is m;station coordinate and UTM-43N system conversion formula refers to Civil Engineering volume.
3. Sewage inspection well that lies on hardened ground has a same top elevation with ground,top elevation of other well that lies on site ground is 50 mm higher than gound elevation.If graphics dimension do not match with site floor elevation,dimensions should be adjusted according to the actual floor elevation.
4. Where the series of rainwater outlets meet the cable trench, the inspection well is connected around the bottom of the cable trench, and the elevation is adjusted accordingly.

说明:

1. 本图每跟标高采用EGM2008高程系统，单位以m计；雨水管道标高均为管内底标高。
2. 本每跟座标系统采用站区座标系统，单位以m计；站区座标系统与巴基斯坦UTM-43N平面坐标系的换算公式详见土建相关卷册。
3. 位于硬化地坪上的雨水检查井，井顶标高与地坪标高齐平；位于绿地地坪上的雨水检查井，井顶标高高于所在地坪50mm。如图中尺寸与实际所在地坪标高不符，应按照实际地坪标高调整。
4. 单联雨水口汇流到电缆沟处，检行电缆沟底部连接检查井，标高相应调整。

Reference Drawings

Drwg. No.	Title

Revisions

	Name	Date	Notes

巴基斯坦默蒂亚里—拉合尔±660kV直流输电工程

±660kV HVDC Project from Matiari to Lahore in Pakistan

NATIONAL TRANSMISSION & DESPATCH COMPANY (NTDC) LIMITED PAKISTAN

CONTRACTOR 国家电网 STATE GRID 中国电力技术装备有限公司 CHINA ELECTRIC POWER EQUIPMENT AND TECHNOLOGY CO.,LTD.

拉合尔±660kV换流站

±660kV Lahore Converter Station

设计阶段 PHASE: 施工图 Detail Design

M L H V D C - L C S - C E T - D D - S G - 0 1 0 1 - 0 0 1 B

	姓名 Name	日期 Date
设计 Designed		2019.05.10
校核 Checked		2019.05.10
审核 Reviewed		2019.05.10
批准 Approved		2019.05.10

总图		2019.05.10
土一		2019.05.10
专业 Speciality	会签 Sign	日期 Date

室外雨水下水管道汇总表

Outdoor rainwater pipe summary table

比例 Scale: 1:150

图号 DWG NO.: 49-B60011S-S0102-003

版本 REV.: B

594X841

编号 No.	名 称 Name	规 格 Parameters	单位 Unit	数量	材料 Material	单 重 Single	总 重 Total	参考图号及备注 Remark
19								
18								
17								
16								
15								
14	Horizontal Inlet Gully 砖砌平篦单箅雨水口（铸铁井圈）	1260x960（带铸墨铸铁篦子,井圈） (with bars, frames)	Set 只	251	-	-	-	Water supply and drainage standard collective drawings 给水排水标准图集 05S518/6
13	Cast iron supporter 重型铸铁支座	Φ700m	Set 只	75	-	-	-	-
12	Cast iron Manhoe Cover 重型铸铁井盖	Φ700m	Set 只	75		-	-	-
11	Circular Manhole 圆形雨水检查井（带球墨铸铁踏步）	Φ1500mm	Set 只	11	Bricks 砖砌			Water supply and drainage standard collective drawings 给水排水标准图集 02S515/17
10	Circular Manhole 圆形雨水检查井（带球墨铸铁踏步）	Φ1250mm	Set 只	4	Bricks 砖砌			Water supply and drainage standard collective drawings 给水排水标准图集 02S515/15
9	Circular Manhole 圆形雨水检查井（带球墨铸铁踏步）	Φ1000mm	Set 只	9	Bricks 砖砌	-	-	Water supply and drainage standard collective drawings 给水排水标准图集 02S515/12
8	Concrete Piping 承插柔性接口钢筋混凝土管	DN900mm	m 米	65	Concrete 钢筋混凝土	-	-	包括橡胶密封圈及基础 Including all fittings foundations
7	Concrete Piping 承插柔性接口钢筋混凝土管	DN800mm	m 米	330	Concrete 钢筋混凝土	-	-	包括橡胶密封圈及基础 Including all fittings foundations
6	Concrete Piping 承插柔性接口钢筋混凝土管	DN700mm	m 米	38	Concrete 钢筋混凝土	-	-	包括橡胶密封圈及基础 Including all fittings foundations
5	Concrete Piping 承插柔性接口钢筋混凝土管	DN600mm	m 米	141	Concrete 钢筋混凝土	-	-	包括橡胶密封圈及基础 Including all fittings foundations
4	Concrete Piping 承插柔性接口钢筋混凝土管	DN500mm	m 米	104	Concrete 钢筋混凝土	-	-	包括橡胶密封圈及基础 Including all fittings foundations
3	Concrete Piping 承插柔性接口钢筋混凝土管	DN400mm	m 米	480	Concrete 钢筋混凝土	-	-	包括橡胶密封圈及基础 Including all fittings foundations
2	Concrete Piping 承插柔性接口钢筋混凝土管	DN300mm	m 米	900	Concrete 钢筋混凝土	-	-	包括橡胶密封圈及基础 Including all fittings foundations
1	Concrete Piping 承插柔性接口钢筋混凝土管	DN200mm	m 米	1730	Concrete 钢筋混凝土	-	-	包括橡胶密封圈及基础 Including all fittings foundations
编号 No.	名 称 Name	规 格 Parameters	单位 Unit	数量	材料 Material	单 重 Single	总 重 Total	参考图号及备注 Remark
						重量Weight		

编号 No.	名 称 Name	规 格 Parameters	单位 Unit	数量	材料 Material	单 重 Single	总 重 Total	参考图号及备注 Remark
						重量Weight		

Reference Drawings

Drwg. No.	Title

Revisions

	Name	Date	Notes

巴基斯坦默蒂亚里—拉合尔±660kV直流输电工程

±660kV HVDC Project from Matiari to Lahore in Pakistan

NATIONAL TRANSMISSION & DESPATCH COMPANY (NTDC) LIMITED PAKISTAN

CONTRACTOR 国家电网

中国电力技术装备有限公司

CHINA ELECTRIC POWER EQUIPMENT AND TECHNOLOGY CO.,LTD.

拉合尔±660kV换流站

±660kV Lahore Converter Station

设计阶段 PHASE: 施工图 Detail Design

MLHVDC-LCS-CET-DD-SG-010 1-001B

	姓名 Name	日期 Date
设计 Designed		2019.05.10
校核 Checked		2019.05.10
审核 Reviewed		2019.05.10
批准 Approved		2019.05.10

室外雨水下水管道材料表

Outdoor rainwater pipe material table

专业 Speciality	会签 Sign	日期 Date
总图		2019.05.10
非一		2019.05.10

比例 Scale: 1:500

图号 DWG NO.: 49-B60011S-S0102-004

版本 REV.: B

594X841